

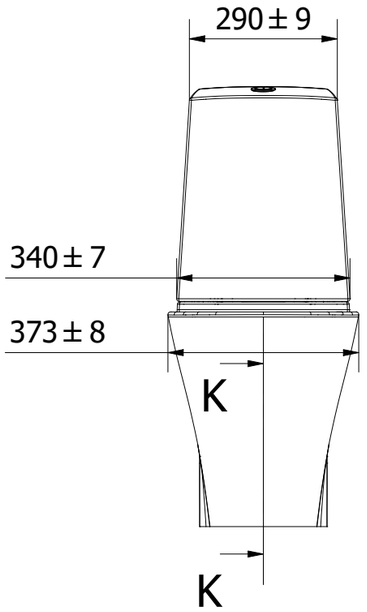
290 ± 9
340 ± 7
373 ± 8
K
K

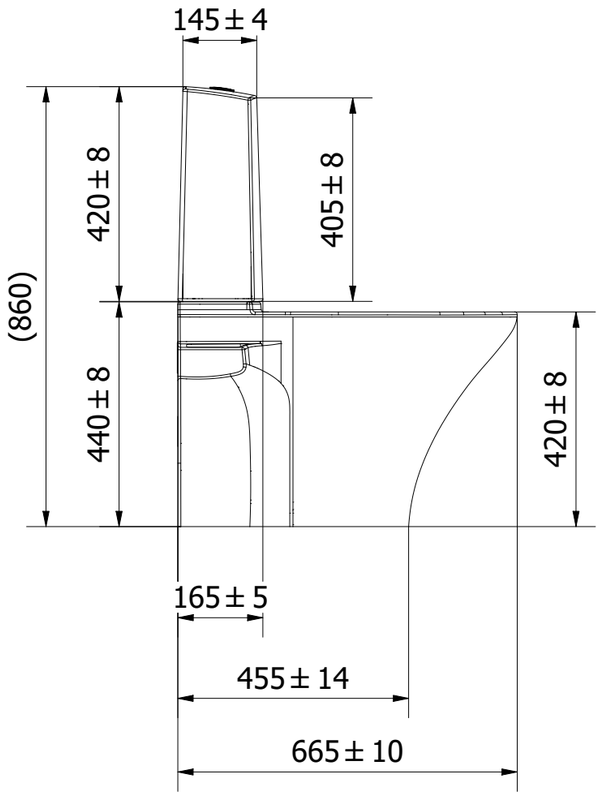
145 ± 4
420 ± 8
405 ± 8
(860)
440 ± 8
420 ± 8
165 ± 5
455 ± 14
665 ± 10

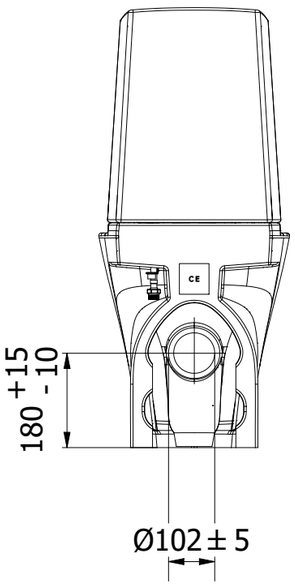
180 +15 -10
Ø102 ± 5

K-K (1 : 12)

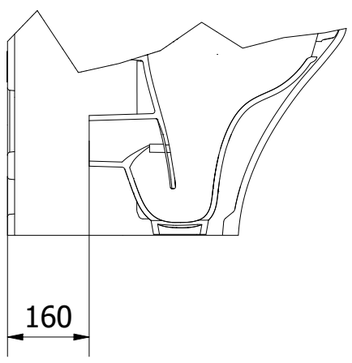
160

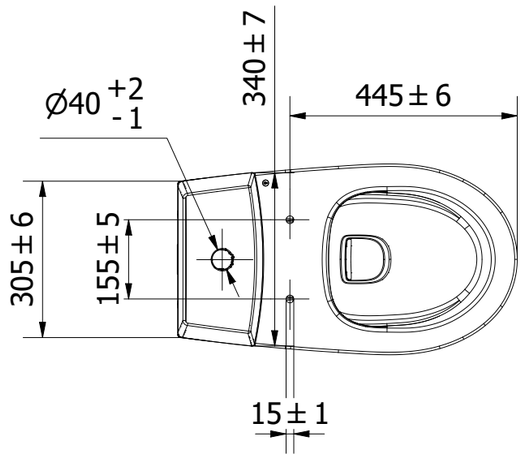
Ø40 +2 -1
340 ± 7
445 ± 6
305 ± 6
155 ± 5
15 ± 1

